Source Four LED™ Photometry Guide

Source Four LED Series

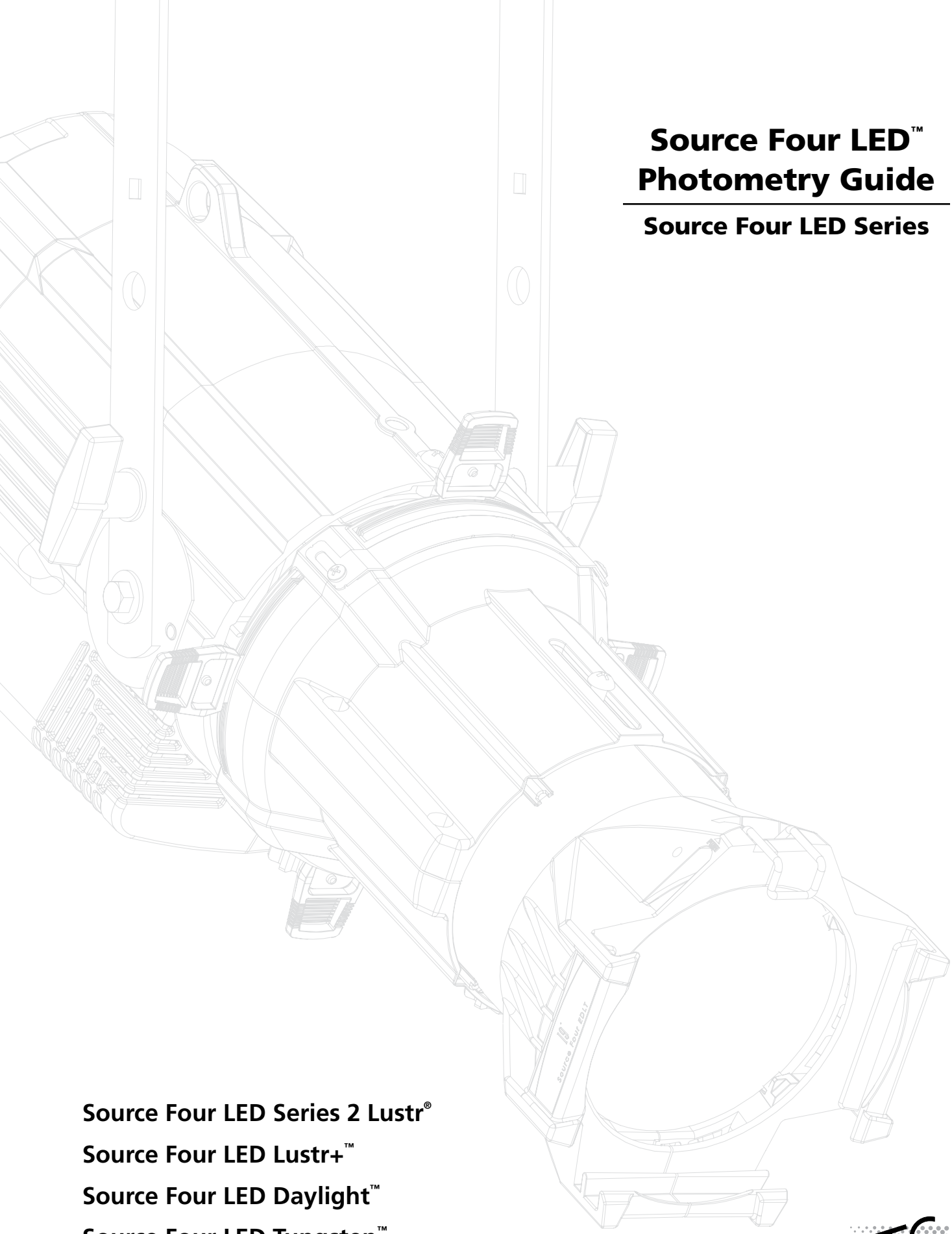

Source Four LED Series 2 Lustr®

Source Four LED Lustr+™

Source Four LED Daylight™

Source Four LED Tungsten™

Source Four LED Studio HD™

The Source Four LED has a flat field, which should be taken into account when calculating foot-candles.

Below is a comparison between two fixtures that produce similar amounts of light, but different light distributions.

The D40 has a much narrower beam, so the fixture will seem much brighter in the center. The Source Four LED, on the other hand, distributes light more evenly, and brightness will be similar across the beam.

Source Four LED Lustr+

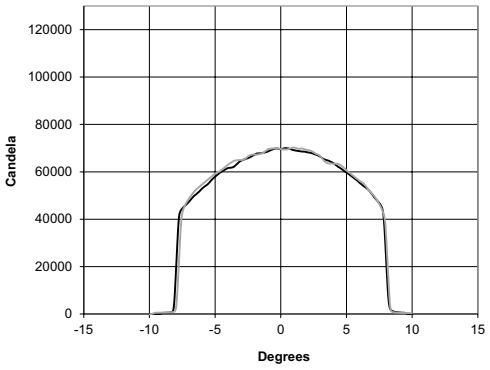

Desire D40 Lustr+

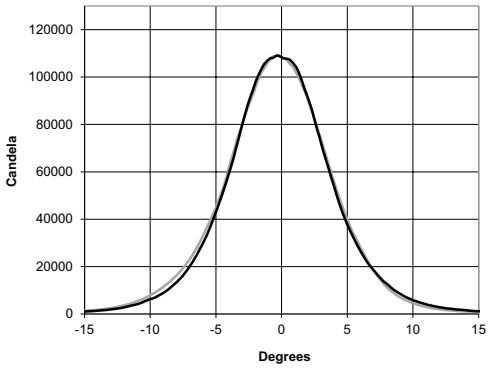

Source Four LED Studio HD 90°

Mode	Degree	Candela	Field Lumens	Beam Lumens	Power Consumption	Efficacy (lpw)
Boost Full - Cold	90°	6,230	6,430	3,450	128	50.2
Regulated Full - Cold	90°	5,446	5,640	3,057	105.2	53.6
Regulated 3200K - Cold	90°	5,289	5,442	2,998	89.2	61.0
Regulated 5600K - Cold	90°	4,518	4,638	2,573	85.6	54.2

Metric Conversions: For meters, multiply feet by .3048
For lux, multiply foot-candles by 10.76

Candela Plot

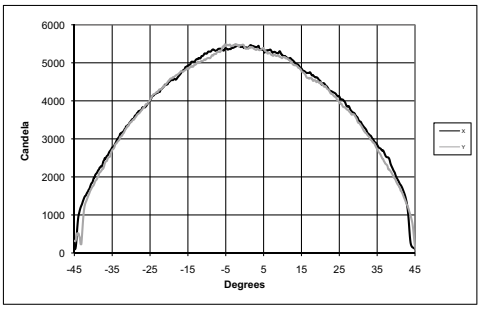

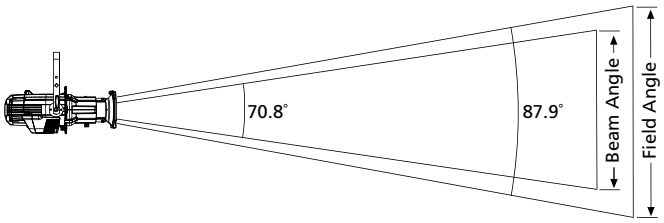

Throw Distance (d)	10′ 3.0m	15′ 4.6m	20′ 6.1m	30′ 9.1m	508.9′ 155.1m
Field Diameter	19.3′ 5.9m	28.9′ 8.8m	38.6′ 11.8m	57.8′ 17.6m	–
Illuminance (fc)	54	24	14	6.1	
Illuminance (lux)	586	261	147	65	

For field diameter at any distance, multiply distance by 0.126
For beam diameter at any distance, multiply by 0.119

Iso-Illuminance Diagram
(Flat Surface Distribution)

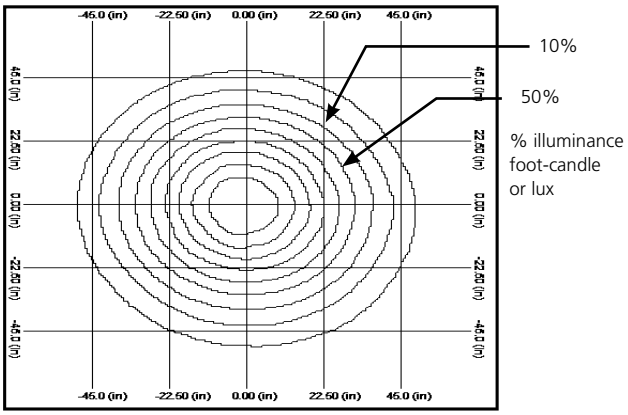

Source Four LED Studio HD 15-30° Zoom Narrow

Mode	Degree	Candela	Field Lumens	Beam Lumens	Power Consumption	Efficacy (lpw)
Boost Full - Cold	15-30°	111,300	4,940	4,180	128	38.6
Regulated Full - Cold	15-30°	97,287	4,333	3,704	105.2	41.2
Regulated 3200K - Cold	15-30°	94,494	4,181	3,632	89.2	46.9
Regulated 5600K - Cold	15-30°	80,715	3,563	3,117	85.6	41.6

Metric Conversions: For meters, multiply feet by .3048
For lux, multiply foot-candles by 10.76

Candela Plot

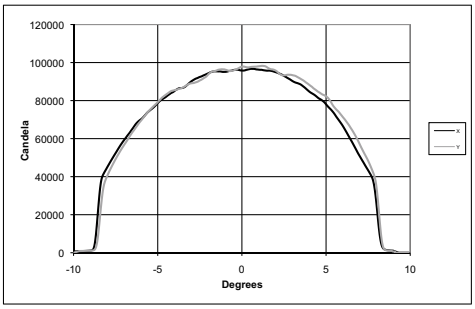

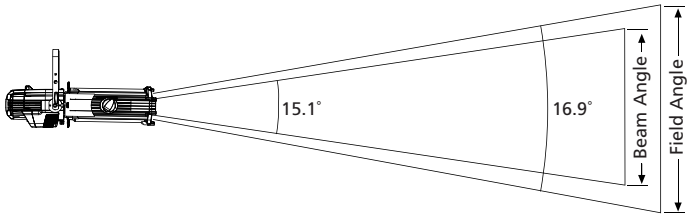

Throw Distance (d)	10′ 3.0m	15′ 4.6m	20′ 6.1m	30′ 9.1m	372.8′ 113.6m
Field Diameter	3.0′ 0.9m	4.5′ 1.4m	5.9′ 1.8m	8.9′ 2.7m	–
Illuminance (fc)	973	432	243	108.1	
Illuminance (lux)	10,472	4,654	2,618	1,168	

For field diameter at any distance, multiply distance by 0.193
For beam diameter at any distance, multiply by 0.184

Iso-Illuminance Diagram
(Flat Surface Distribution)

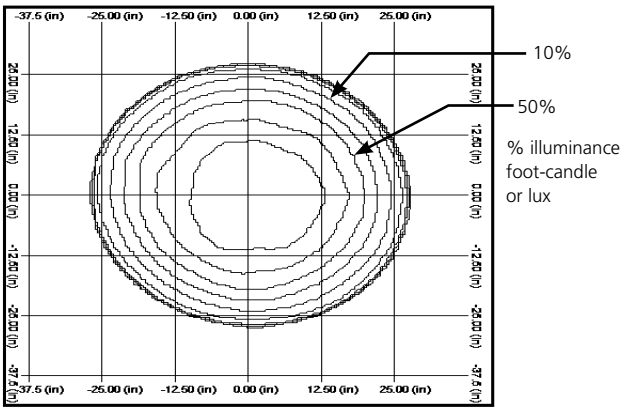

Source Four LED Studio HD 15-30° Zoom Mid

Mode	Degree	Candela	Field Lumens	Beam Lumens	Power Consumption	Efficacy (lpw)
Boost Full - Cold	15-30°	56,050	5,500	4,640	128	43.0
Regulated Full - Cold	15-30°	48,993	4,825	4,112	105.2	45.9
Regulated 3200K - Cold	15-30°	47,586	4,655	4,032	89.2	52.2
Regulated 5600K - Cold	15-30°	40,647	3,967	3,461	85.6	46.3

Metric Conversions: For meters, multiply feet by .3048
For lux, multiply foot-candles by 10.76

Candela Plot

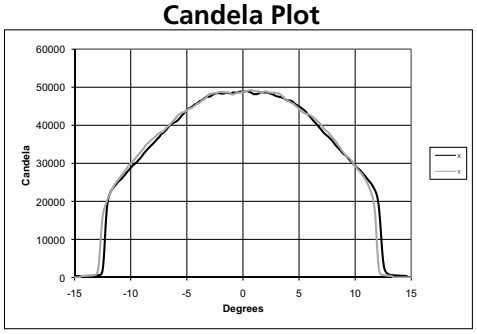

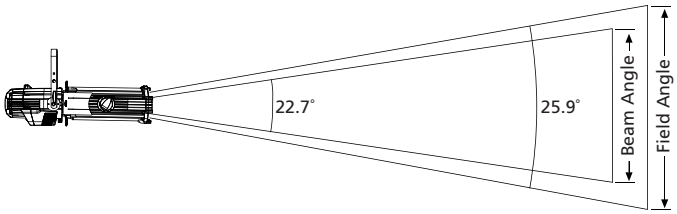

Throw Distance (d)	10′ 3.0m	15′ 4.6m	20′ 6.1m	30′ 9.1m	508.9′ 155.1m
Field Diameter	4.6′ 1.4m	6.9′ 2.1m	9.2′ 2.8m	13.8′ 4.2.	–
Illuminance (fc)	490	218	122	54.4	
Illuminance (lux)	5,274	2,344	1,318	586	

For field diameter at any distance, multiply distance by 0.126
For beam diameter at any distance, multiply by 0.119

Iso-Illuminance Diagram
(Flat Surface Distribution)

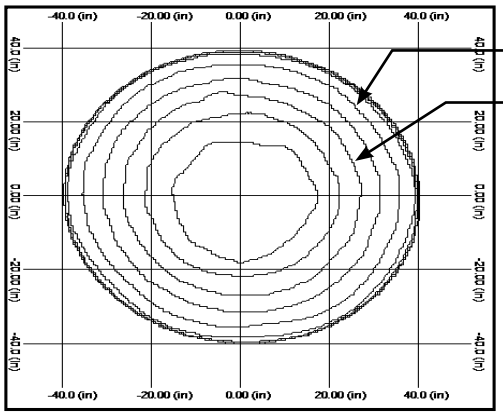

% illuminance
foot-candle
or lux

Source Four LED Studio HD 15-30° Zoom Wide

Mode	Degree	Candela	Field Lumens	Beam Lumens	Power Consumption	Efficacy (lpw)
Boost Full - Cold	15-30°	32,500	5,160	3,990	128	40.3
Regulated Full - Cold	15-30°	28,408	4,526	3,536	105.2	43.0
Regulated 3200K - Cold	15-30°	27,593	4,367	3,467	89.2	49.0
Regulated 5600K - Cold	15-30°	23,569	3,722	2,976	85.6	43.5

Metric Conversions: For meters, multiply feet by .3048
For lux, multiply foot-candles by 10.76

Candela Plot

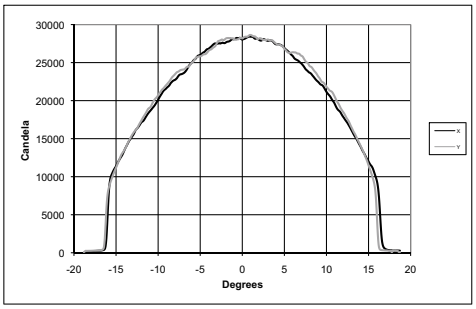

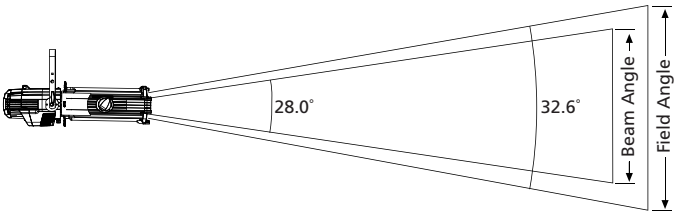

Throw Distance (d)	10′ 3.0m	15′ 4.6m	20′ 6.1m	30′ 9.1m	372.8′ 113.6m
Field Diameter	5.8′ 1.8m	8.8′ 2.7m	11.7′ 3.6m	17.5′ 5.3m	–
Illuminance (fc)	284	126	71	31.6	
Illuminance (lux)	3,058	1,359	764	340	

For field diameter at any distance, multiply distance by 0.193
For beam diameter at any distance, multiply by 0.184

Iso-Illuminance Diagram
(Flat Surface Distribution)

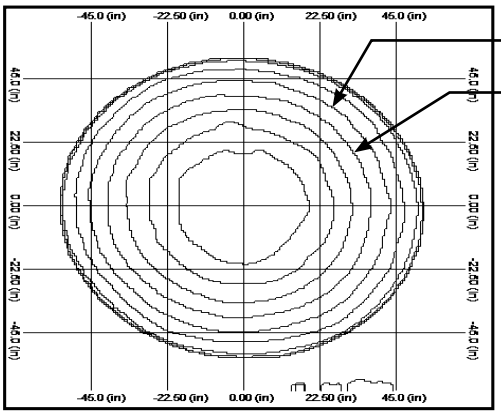

% illuminance
foot-candle
or lux

Source Four LED Studio HD 25-50° Zoom Narrow

Mode	Degree	Candela	Field Lumens	Beam Lumens	Power Consumption	Efficacy (lpw)
Boost Full - Cold	25-50°	39,800	5,945	5,760	128	46.4
Regulated Full - Cold	25-50°	34,789	5,215	5,105	105.2	49.6
Regulated 3200K - Cold	25-50°	33,790	5,032	5,005	89.2	56.4
Regulated 5600K - Cold	25-50°	28,863	4,288	4,296	85.6	50.1

Metric Conversions: For meters, multiply feet by .3048
For lux, multiply foot-candles by 10.76

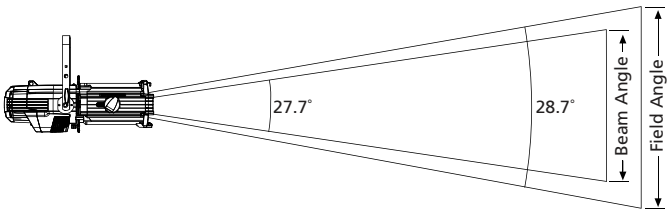

Throw Distance (d)	10′ 3.0m	15′ 4.6m	20′ 6.1m	30′ 9.1m	508.9′ 155.1m
Field Diameter	5.1′ 1.6m	7.7′ 2.3m	10.2′ 3.1m	15.3′ 4.7m	–
Illuminance (fc)	348	155	87	38.7	
Illuminance (lux)	3,745	1,664	936	416	

For field diameter at any distance, multiply distance by 0.126
For beam diameter at any distance, multiply by 0.119

Candela Plot

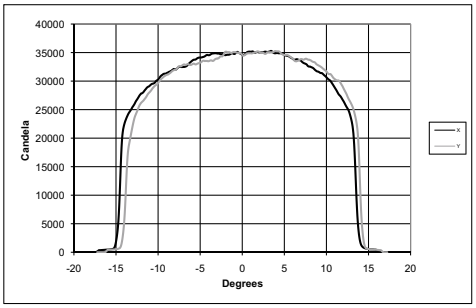

Iso-Illuminance Diagram
(Flat Surface Distribution)

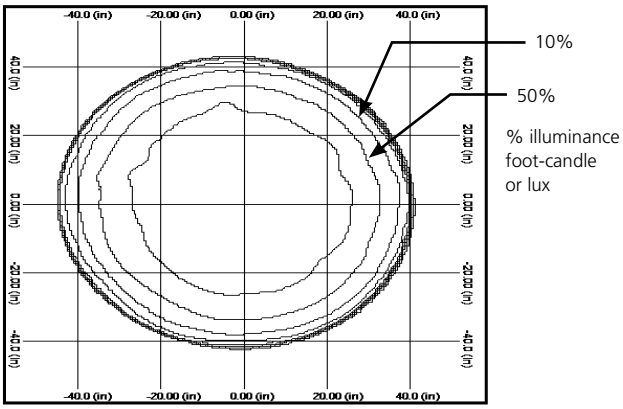

Source Four LED Studio HD 25-50° Zoom Mid

Mode	Degree	Candela	Field Lumens	Beam Lumens	Power Consumption	Efficacy (lpw)
Boost Full - Cold	25-50°	22,820	6,344	5,697	128	49.6
Regulated Full - Cold	25-50°	19,947	5,565	5,049	105.2	52.9
Regulated 3200K - Cold	25-50°	19,374	5,370	4,950	89.2	60.2
Regulated 5600K - Cold	25-50°	16,549	4,576	4,249	85.6	53.5

Metric Conversions: For meters, multiply feet by .3048
For lux, multiply foot-candles by 10.76

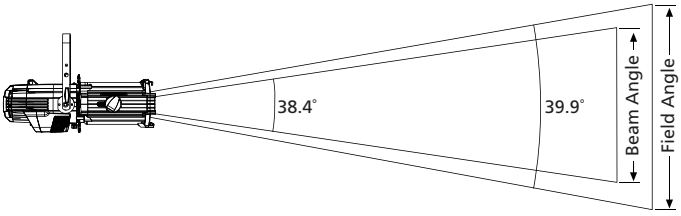

Throw Distance (d)	10′ 3.0m	15′ 4.6m	20′ 6.1m	30′ 9.1m	372.8′ 113.6m
Field Diameter	7.3′ 2.2m	10.9′ 3.3m	14.5′ 4.4m	21.8′ 6.6m	–
Illuminance (fc)	199	89	50	22.2	
Illuminance (lux)	2,147	954	537	239	

For field diameter at any distance, multiply distance by 0.193
For beam diameter at any distance, multiply by 0.184

Candela Plot

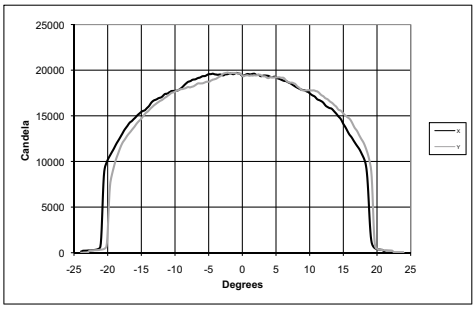

Iso-Illuminance Diagram
(Flat Surface Distribution)

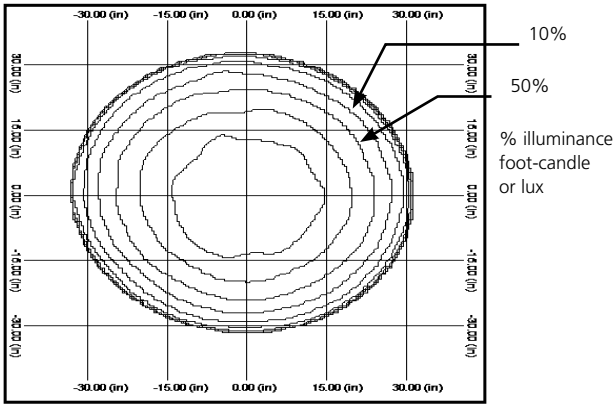

Source Four LED Studio HD 25-50° Zoom Wide

Mode	Degree	Candela	Field Lumens	Beam Lumens	Power Consumption	Efficacy (lpw)
Boost Full - Cold	25-50°	16,280	6,140	4,670	128	48.0
Regulated Full - Cold	25-50°	14,230	5,386	4,139	105.2	51.2
Regulated 3200K - Cold	25-50°	13,822	5,197	4,058	89.2	58.3
Regulated 5600K - Cold	25-50°	11,806	4,429	3,483	85.6	51.7

Metric Conversions: For meters, multiply feet by .3048
For lux, multiply foot-candles by 10.76

Candela Plot

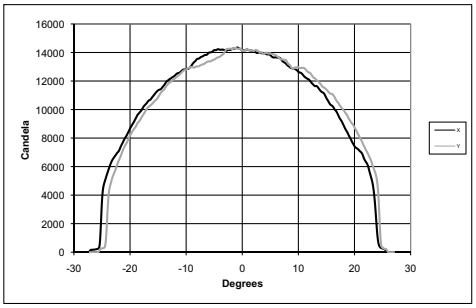

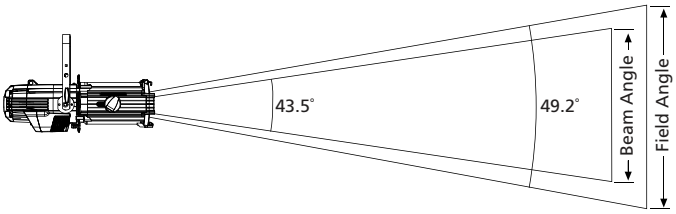

Throw Distance (d)	10′ 3.0m	15′ 4.6m	20′ 6.1m	30′ 9.1m	508.9′ 155.1m
Field Diameter	9.2′ 2.8m	13.7′ 4.2m	18.3′ 5.6m	27.5′ 8.4m	–
Illuminance (fc)	142	63	36	15.8	
Illuminance (lux)	1,532	681	383	170	

For field diameter at any distance, multiply distance by 0.126
For beam diameter at any distance, multiply by 0.119

Iso-Illuminance Diagram
(Flat Surface Distribution)